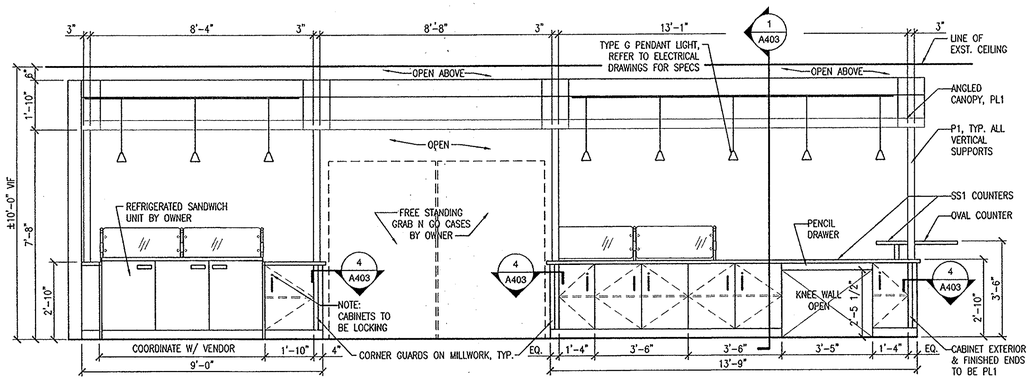

1 SERVERY COUNTER ELEVATION (SEVER SIDE)
SCALE: 3/8" = 1'-0"

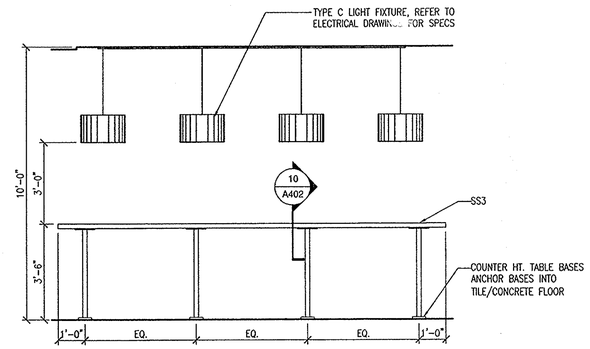

2 ELEVATION
SCALE: 3/8" = 1'-0"

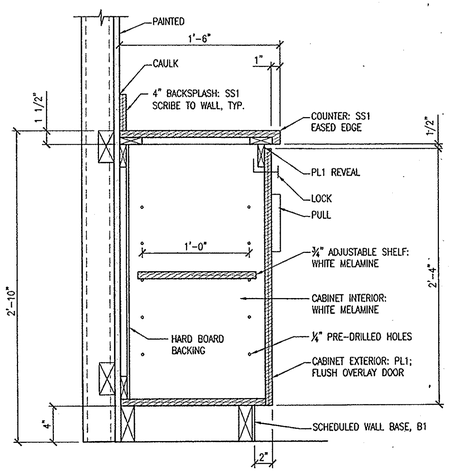

4 SECTION AT CONDIMENT COUNTER
SCALE: 1-1/2" = 1'-0"

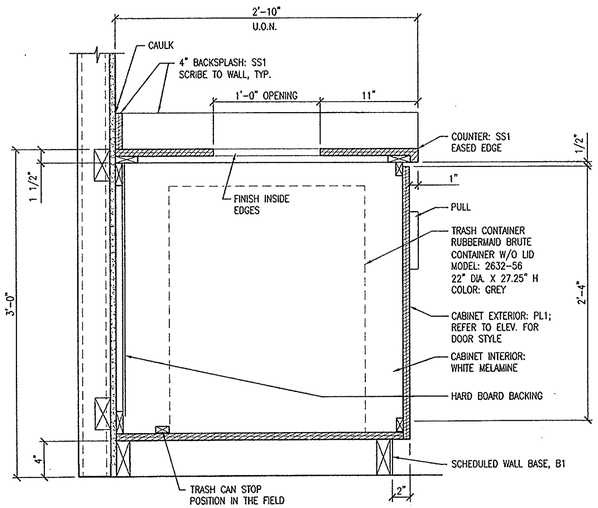

5 SECTION AT TRASH DISPOSAL COUNTER
SCALE: 1-1/2" = 1'-0"

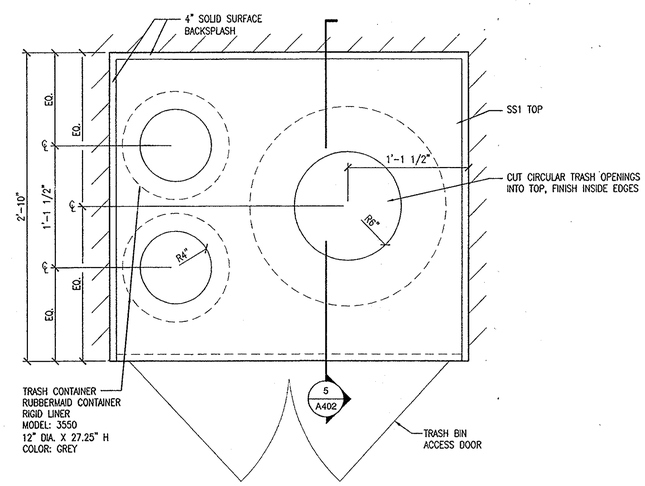

6 DETAIL PLAN AT TRASH DISPOSAL COUNTER
SCALE: 1-1/2" = 1'-0"

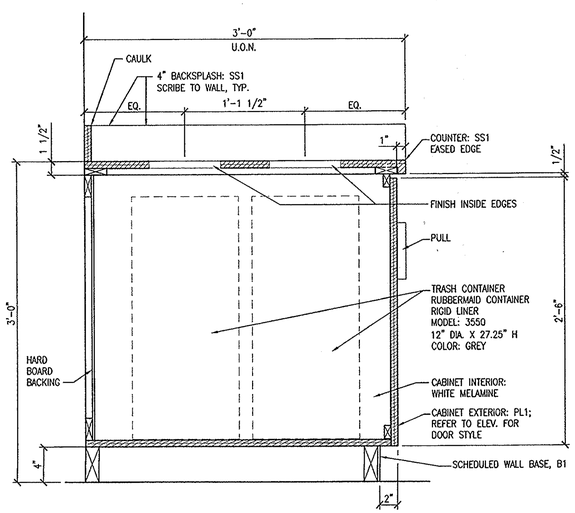

7 SECTION AT RECYCLING COUNTER
SCALE: 1-1/2" = 1'-0"

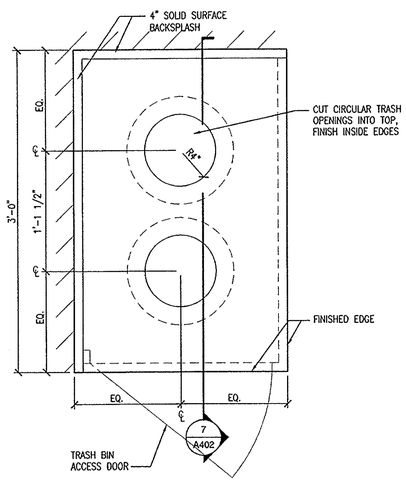

8 DETAIL PLAN AT RECYCLE COUNTER
SCALE: 1-1/2" = 1'-0"

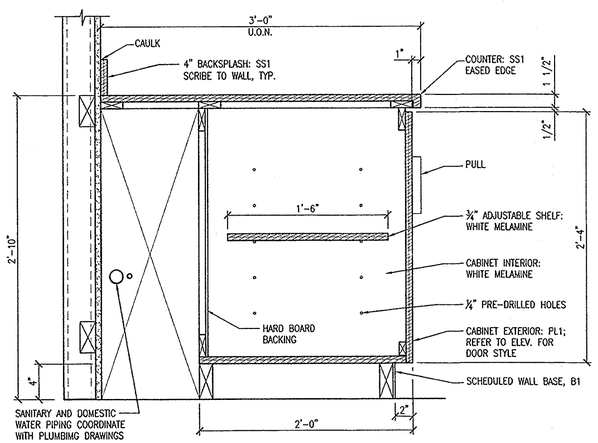

9 SECTION AT PREP COUNTER
SCALE: 1-1/2" = 1'-0"

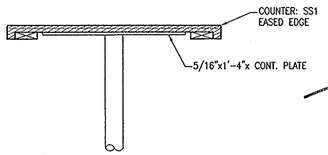

10 SECTION AT COUNTER
SCALE: 1-1/2" = 1'-0"

SUNY PROJECT No. G06098
BOOKS & BYTES CAFE RENOVATION
MILNE LIBRARY

SUNY Geneseo
Campus Auxillary Services
1 College Circle
Geneseo, NY 14454

Bergmann associates
www.bergmannpc.com
28 East Main Street
200 First Federal Plaza
Rochester, New York 14614
585.232.5135 / 585.232.4652 fax
Engineers / Architects /Planners/ Surveyors

REVISIONS

NO.	DATE	DESCRIPTION	REV.	CK'D

NOTE:
Unauthorized alteration or addition to this drawing is a violation of the New York State Education Law Article 145, Section 7209.

INTERIOR ELEVATIONS SECTION & DETAILS

REGISTERED ARCHITECT STEPHEN J. STAVESKI 022547 STATE OF NEW YORK
4.10.09
Date

Project Manager: S. STAVESKI
Designed by: K. STEPHENS
Drawn by: K. STEPHENS
Checked by: S. STAVESKI
Date Issued: APRIL 10, 2009
Scale: AS NOTED

Project Number: 8058.00
File Name:
Drawing Number:

A402