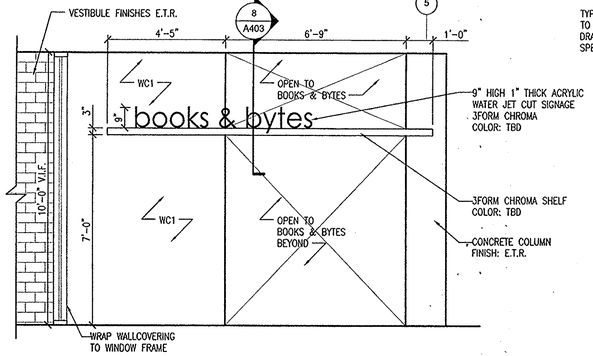

1 ENTRY ELEVATION
SCALE: 3/8" = 1'-0"

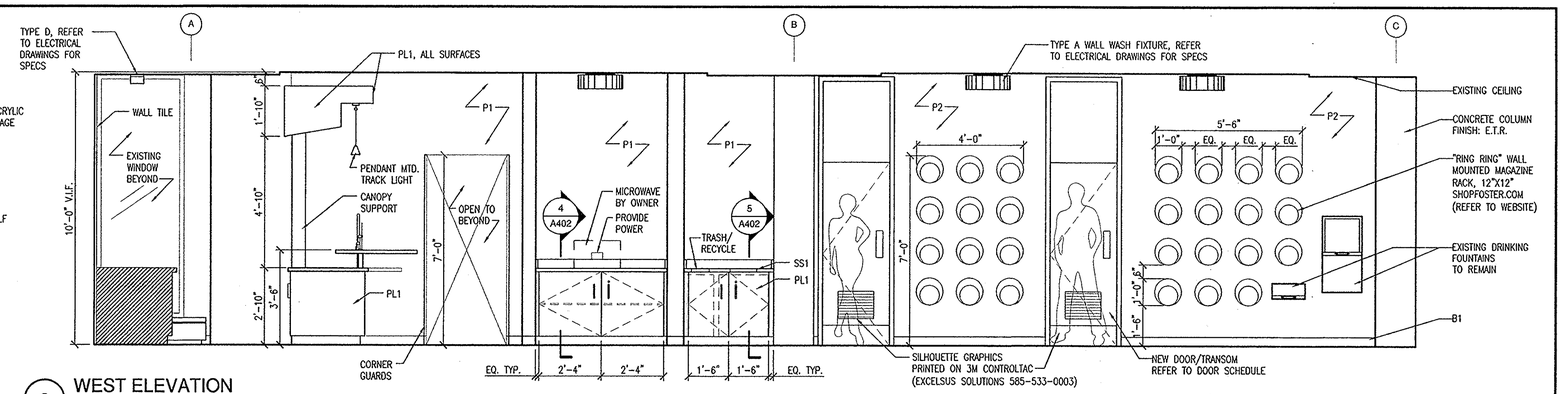

2 WEST ELEVATION
SCALE: 3/8" = 1'-0"

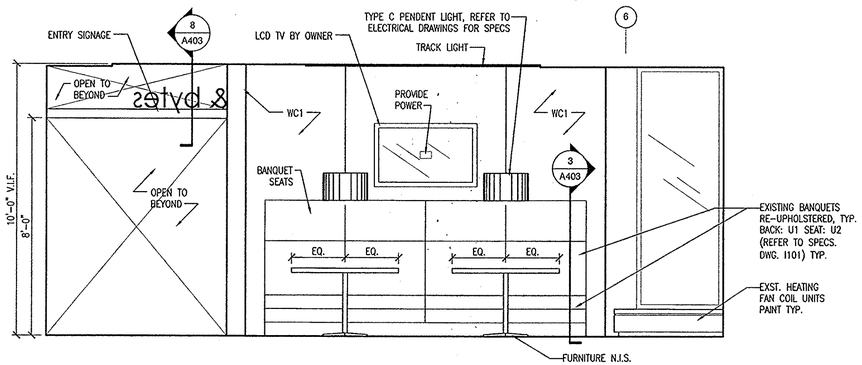

3 SEATING ELEVATION
SCALE: 3/8" = 1'-0"

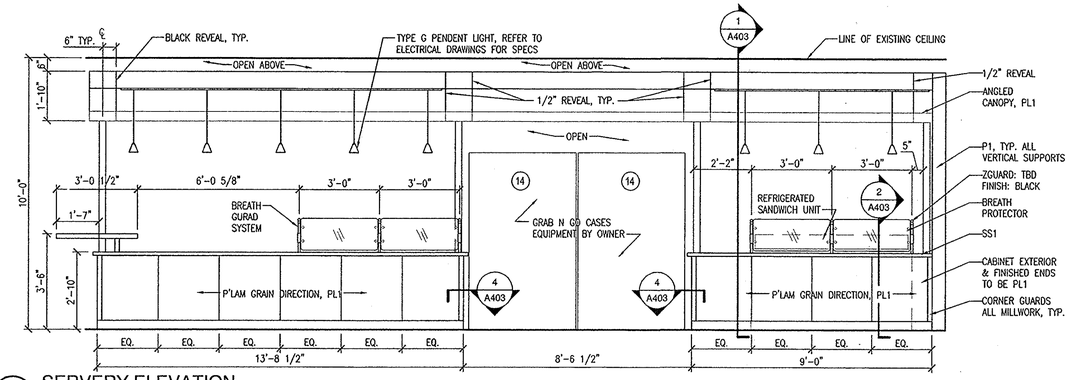

4 SERVERY ELEVATION
SCALE: 3/8" = 1'-0"

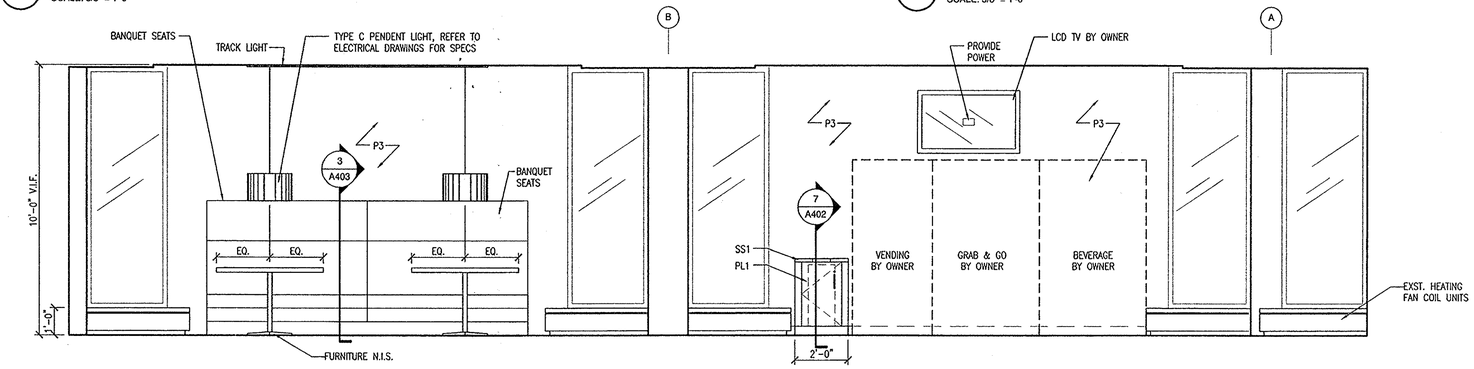

5 EAST ELEVATION
SCALE: 3/8" = 1'-0"

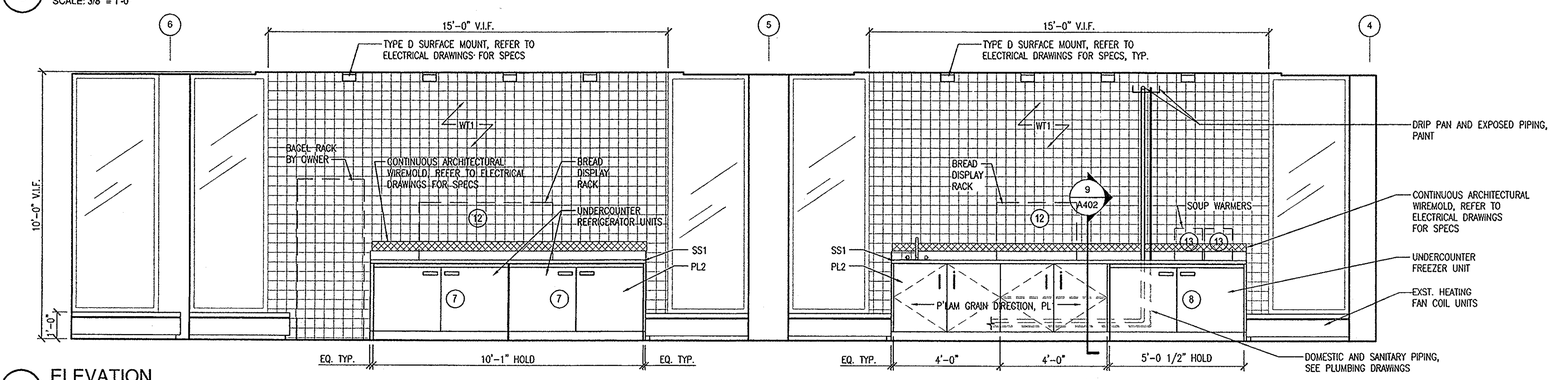

6 ELEVATION
SCALE: 3/8" = 1'-0"

SUNY PROJECT No. G06098
BOOKS & BYTES CAFE RENOVATION
MILNE LIBRARY

SUNY Geneseo
Campus Auxillary Services

1 College Circle
Geneseo, NY 14454

Bergmann associates

www.bergmannpc.com

28 East Main Street
200 First Federal Plaza
Rochester, New York 14614
585.232.5135 / 585.232.4652 fax

Engineers / Architects /Planners/ Surveyors

REVISIONS

NO.	DATE	DESCRIPTION	REV.	CK'D

NOTE:
Unauthorized alteration or addition to this drawing is a violation of the New York State Education Law Article 145, Section 7209.

INTERIOR ELEVATIONS

REGISTERED ARCHITECT JEFFREY JAMES STAVESKI 022541 STATE OF NEW YORK

4-10-09
Date

Project Manager: S. STAVESKI
Designed by: K. STEPHENS
Drawn by: K. STEPHENS
Checked by: S. STAVESKI
Date Issued: APRIL 10, 2009
Scale: AS NOTED

Project Number: 8058.00
File Name:

Drawing Number:

A401